Change description	Date	Designed by
Siphon updated	12.06.2020	VS

MAIN DIMENSIONS

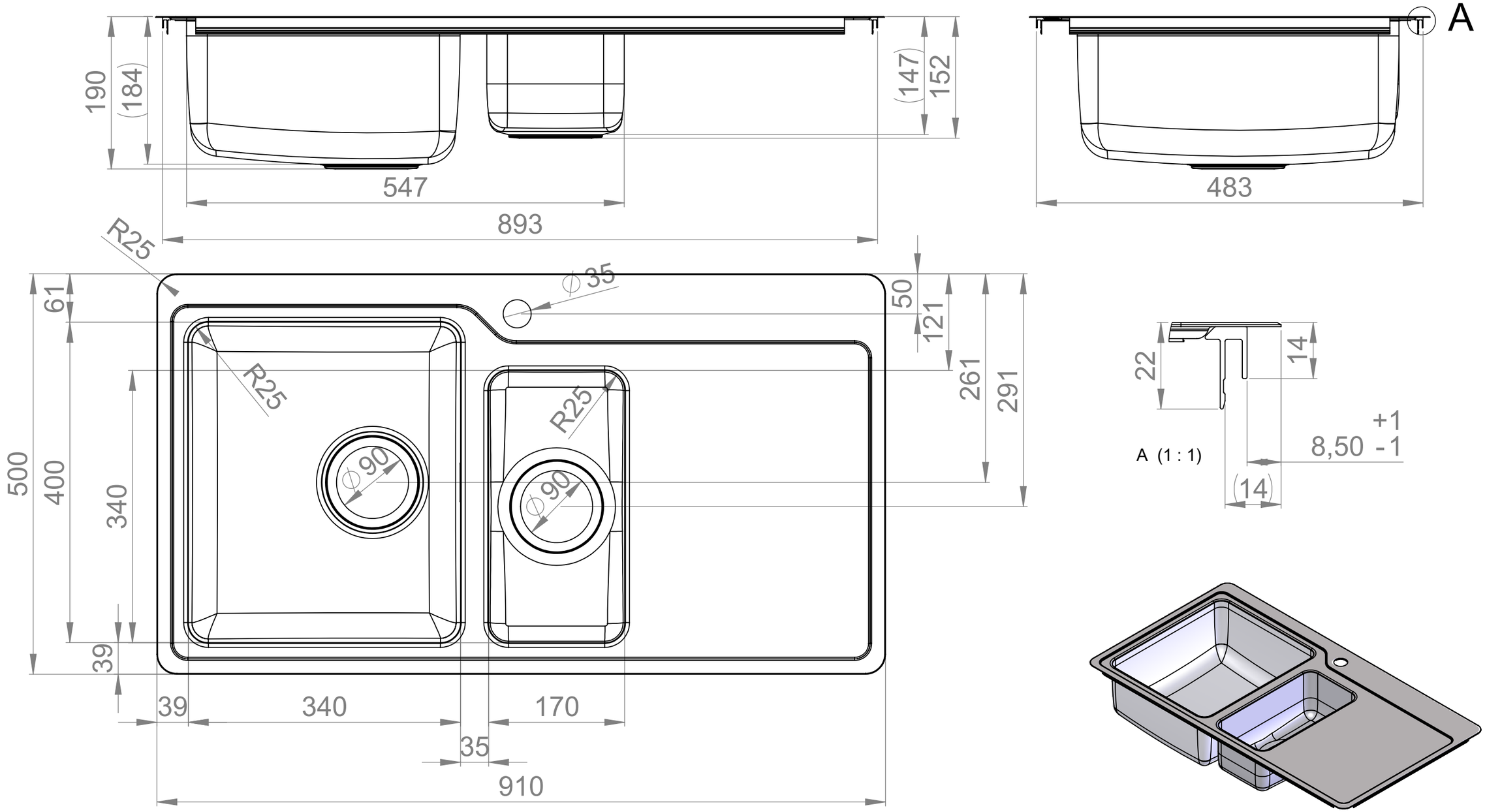

Mass 31.62 kg	General tolerance ISO-2768-m	Designed by TN	Date 21.02.2013
Size A3 / Scale 1:5	Item CES40-17-L	Approved by	Date
STALA www.stala.com	Description N4017-91L Technical Data Sheet	Drawing number 14081	Sheet/sheets 1/6
			Rev D

Change description	Date	Designed by
Siphon updated	12.06.2020	VS

WORKTOP ASSEMBLY

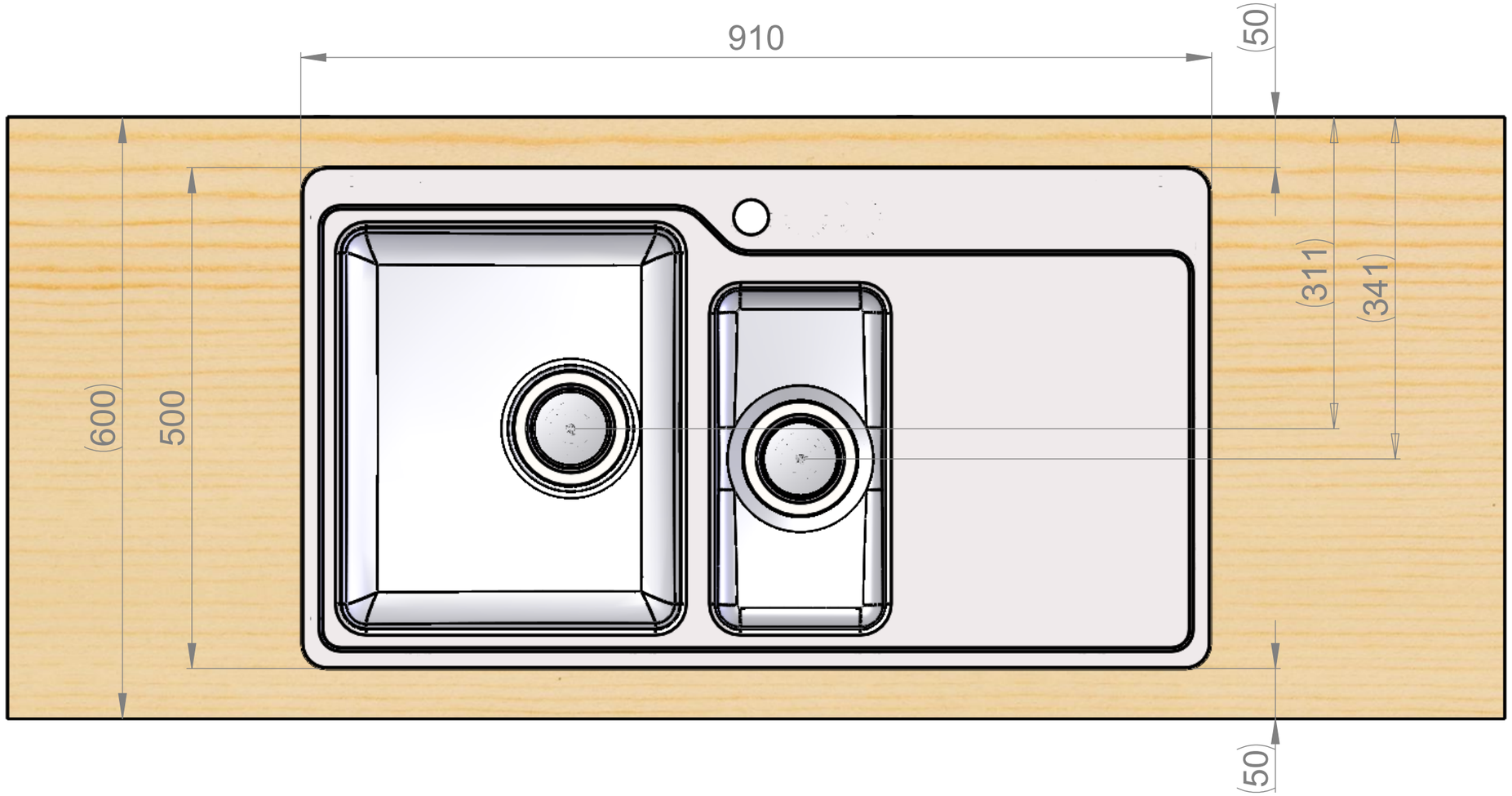

	Mass 31.62 kg	General tolerance ISO-2768-m	Designed by TN	Date 21.02.2013
	Size A3 / Scale 1:5	Item CES40-17-L	Approved by	Date
STALA www.stala.com		Description N4017-91L Technical Data Sheet	Drawing number 14081	Sheet/sheets 2/6
				Rev D

Change description	Date	Designed by
Siphon updated	12.06.2020	VS

SPACE REQUIREMENTS

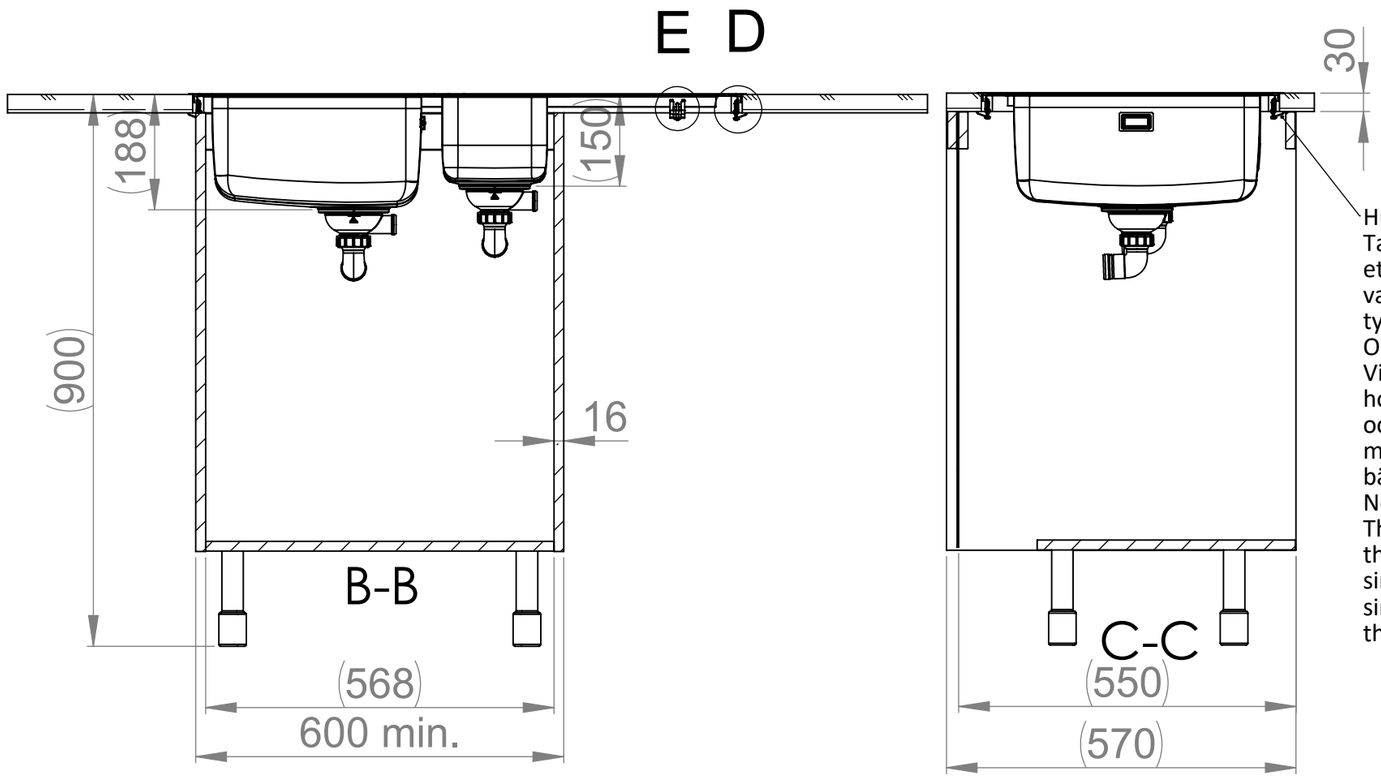

Huom!
Tarvittaessa kaapin väliseinää ja etu/takalistaa lovettava kiinnikkeitä varten ja pesuallas on kiinnitettävä ennen työtason asennusta.
Obs!
Vid behov måste en inskärning för hofästena göras i skåpets mellanvägg och förbindningslist och diskbänken måste fästas innan du monterar bänkskivan.
Notice!
The partition walls and front/back list of the cupboard must be notched for the sink mountings when needed and the sink must be fastened before installing the worktop.

D (1 : 1)

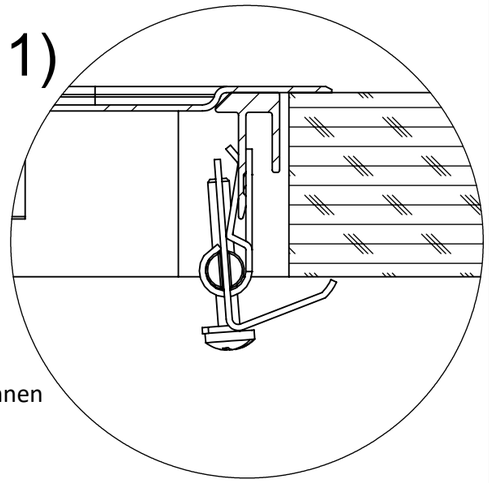

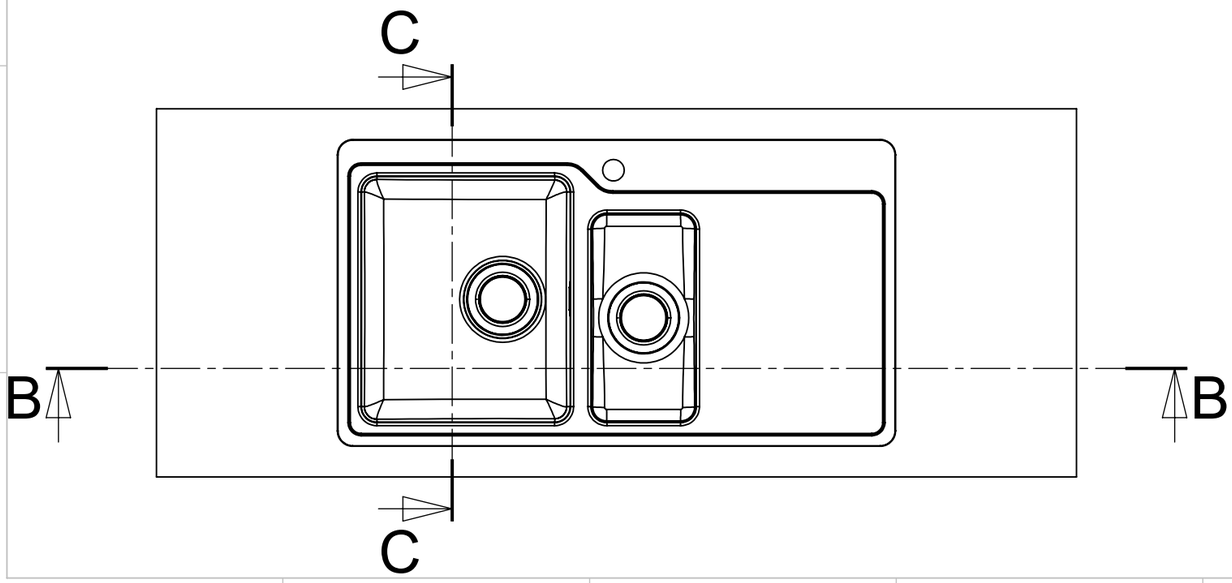

E (1 : 1)

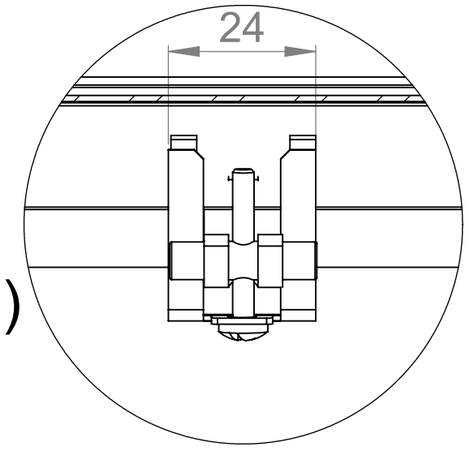

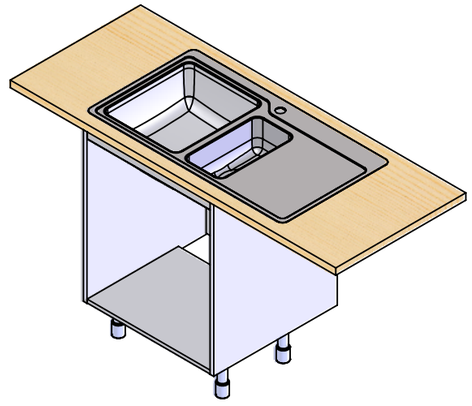

	Mass 31.62 kg	General tolerance ISO-2768-m	Designed by TN	Date 21.02.2013
	Size A3 / Scale 1:10	Item CES40-17-L	Approved by	Date
STALA www.stala.com		Description N4017-91L Technical Data Sheet	Drawing number 14081	Sheet/sheets 3/6
				Rev D

Change description	Date	Designed by
Siphon updated	12.06.2020	VS

CUT-OUT

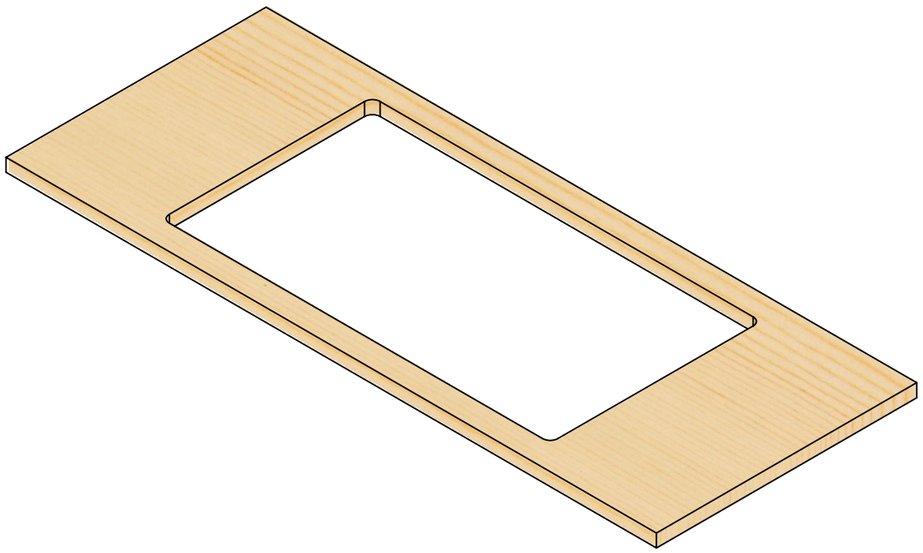
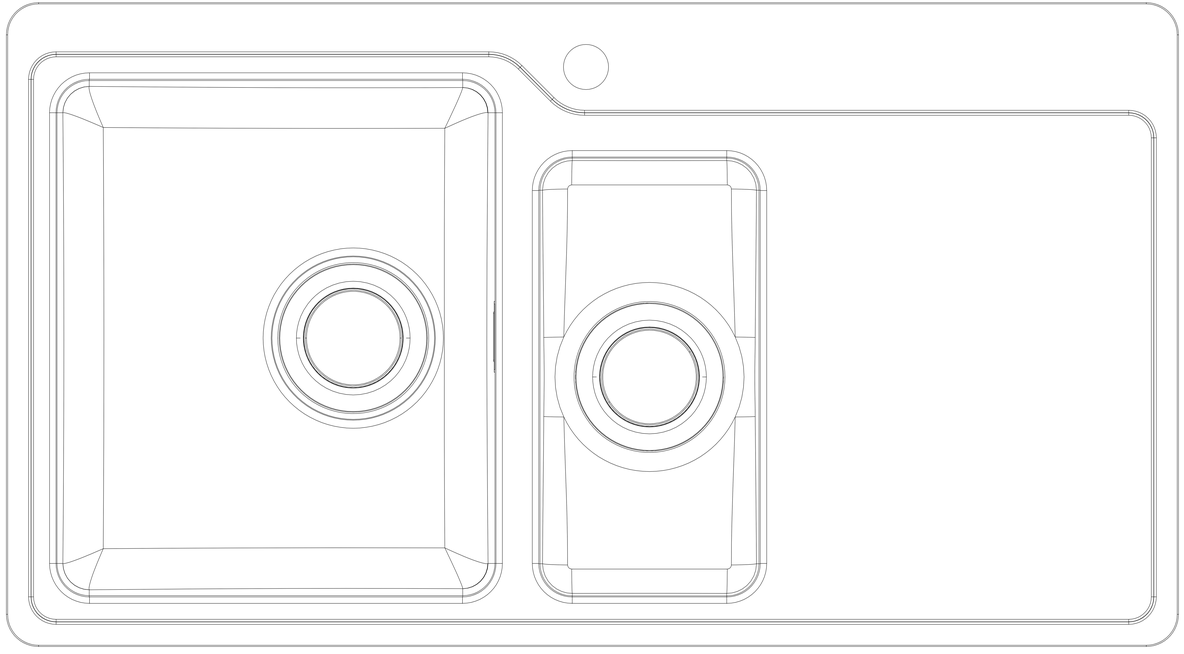
	Mass 31.62 kg	General tolerance ISO-2768-m	Designed by TN	Date 21.02.2013
	Size A3 / Scale 1:1	Item CES40-17-L	Approved by	Date
STALA www.stala.com		Description N4017-91L Technical Data Sheet	Drawing number 14081	Sheet/sheets 4/6
				Rev D