Change description	Date	Designed by
Design-cover removed, tap support plate added	29.10.2025	VS

MAIN DIMENSIONS

① When width is <= 500

② When width is > 500

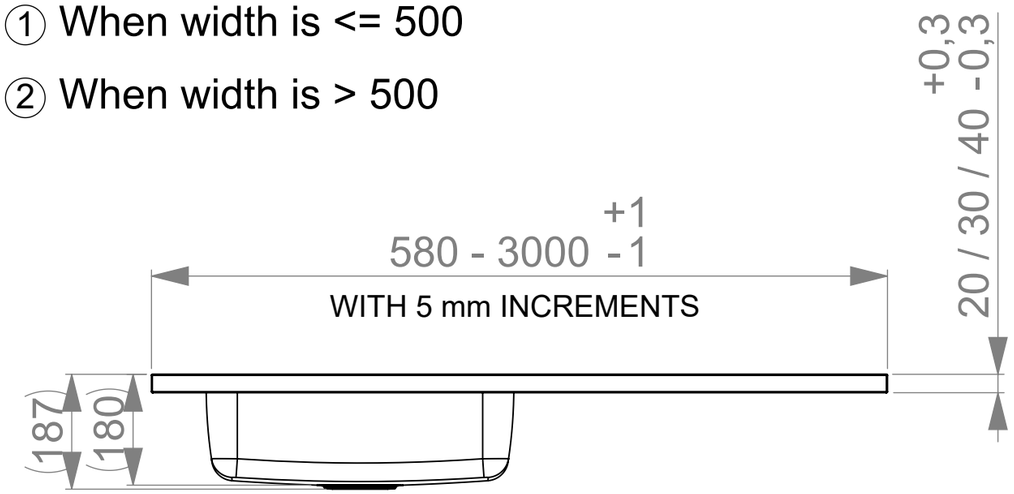

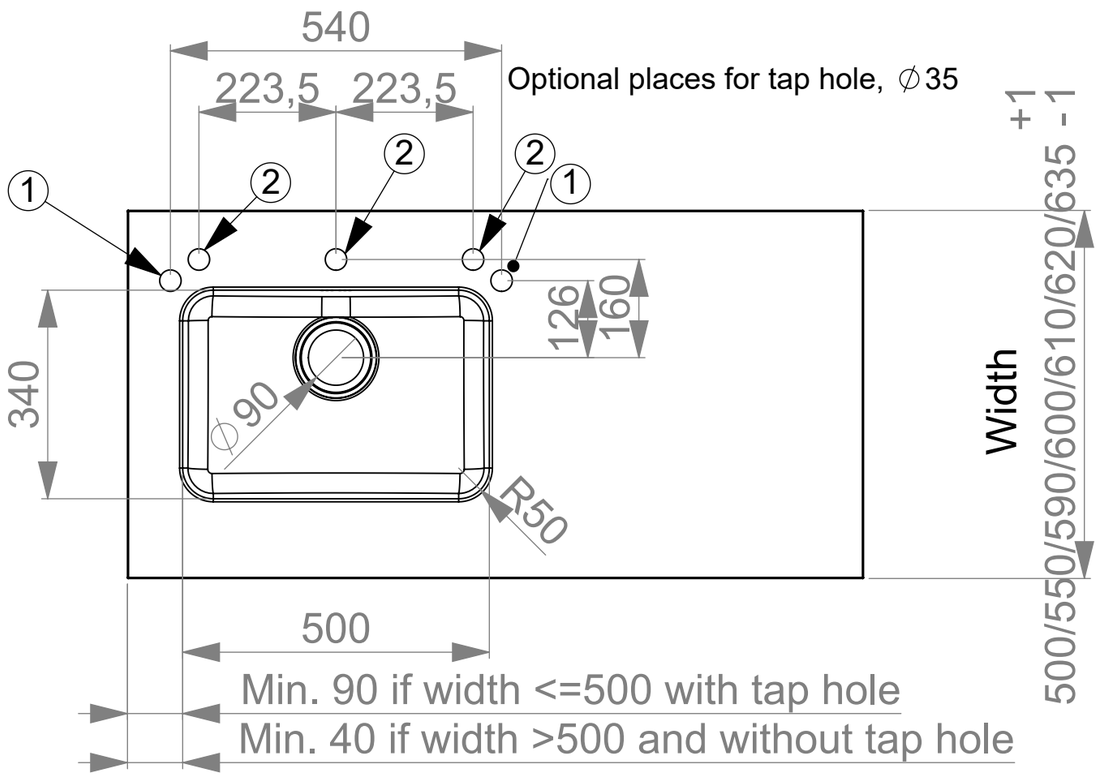

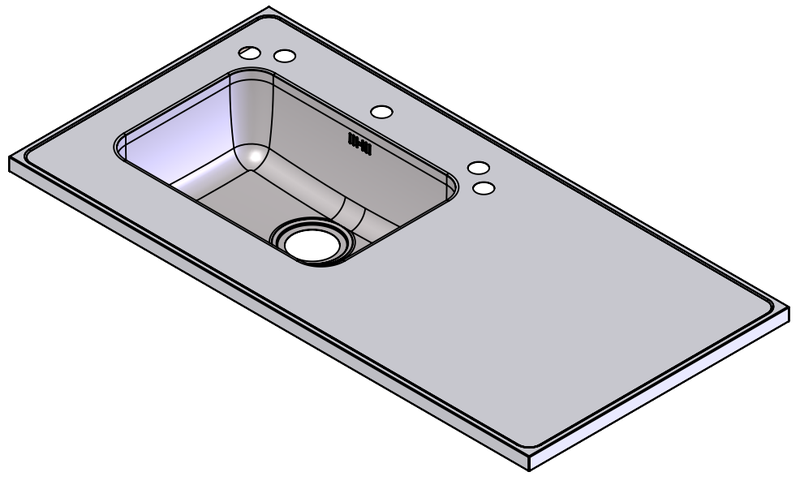

Mass kg		General tolerance	Designed by VS	Date 19.11.2019
Size A3	Scale 1:10	Item	Approved by JP	Date 03.01.2020
STALA Member of ALVEUS		Description L SEVEN Technical Data Sheet	Drawing number 19033	Sheet/sheets 1/5
				Rev C

Change description	Date	Designed by
Design-cover removed, tap support plate added	29.10.2025	VS

EDGE PROFILES

STRAIGHT EDGE PROFILE

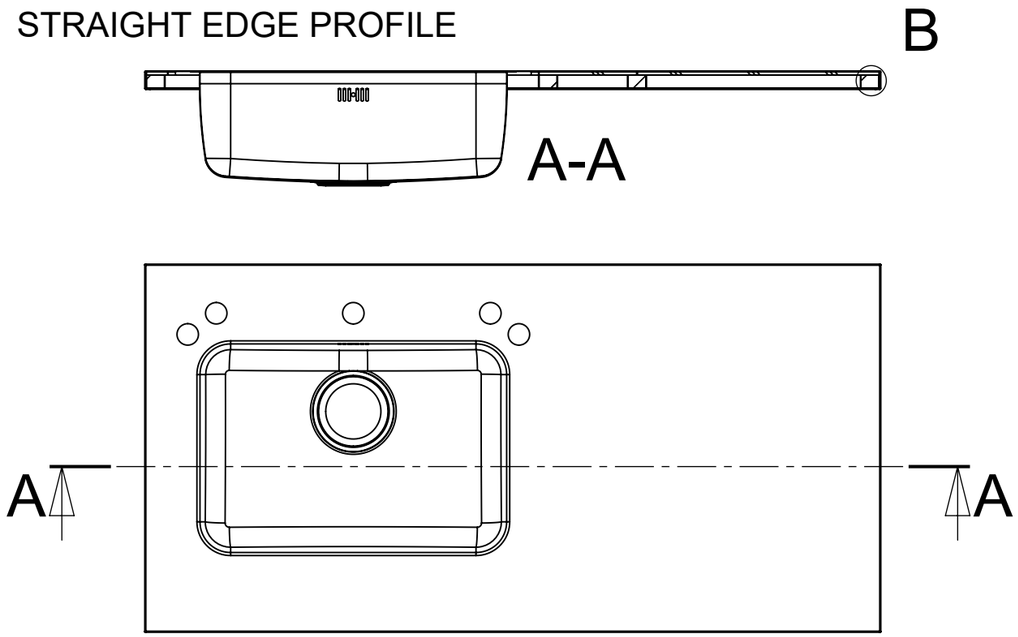

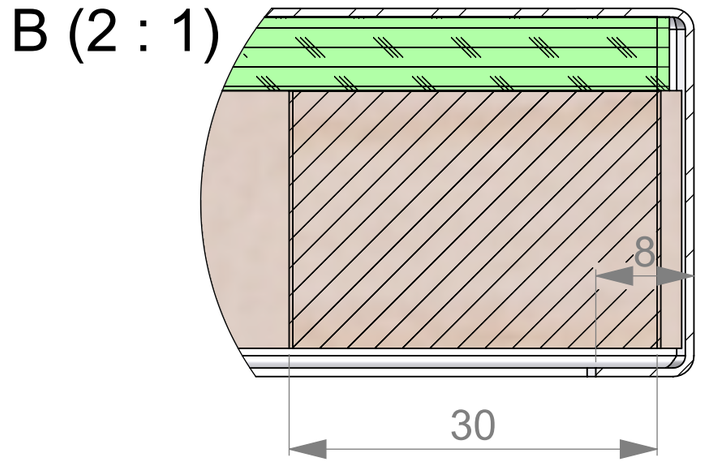

RAISED EDGE PROFILE

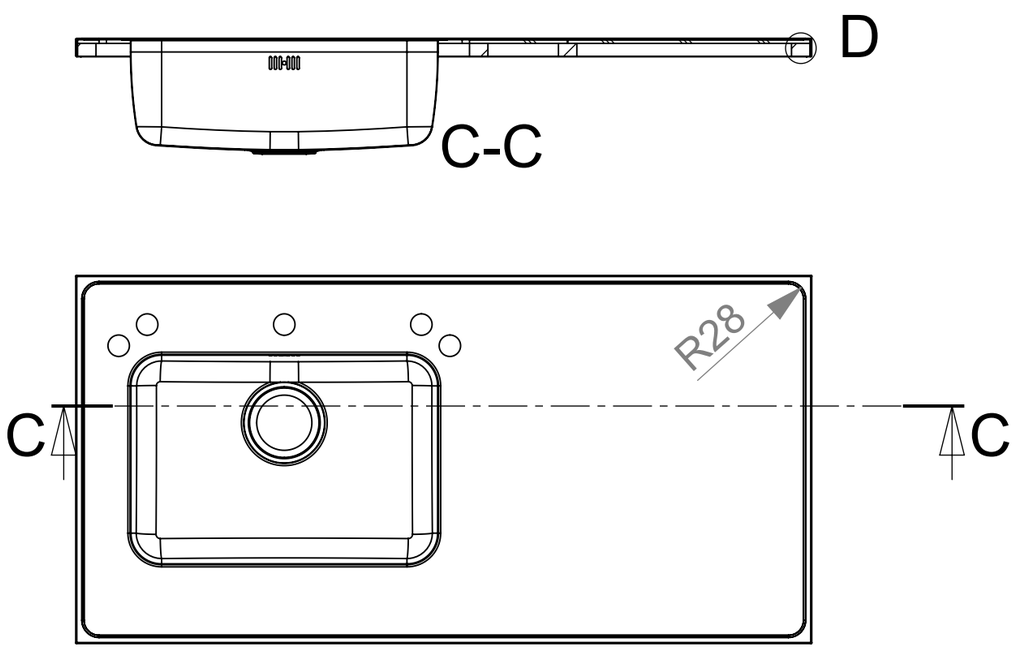

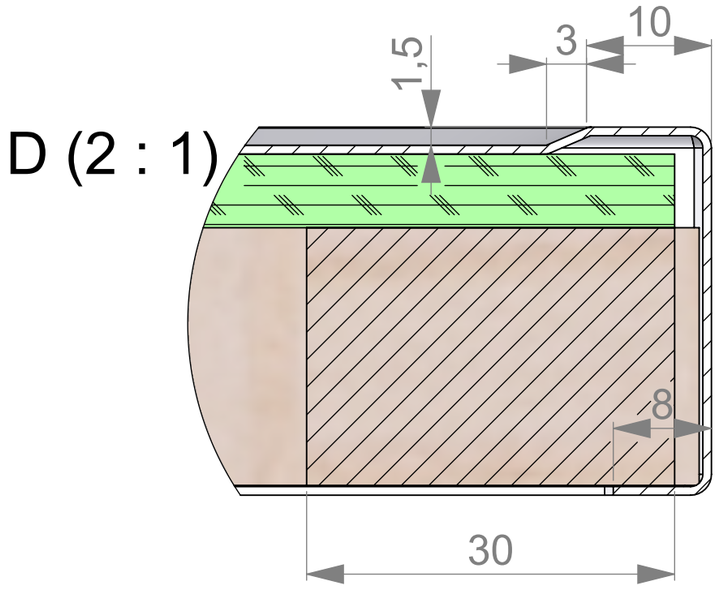

	Mass kg	General tolerance	Designed by VS	Date 19.11.2019
	Size A3 / Scale 1:10	Item	Approved by JP	Date 03.01.2020
STALA Member of ALVEUS		Description L SEVEN Technical Data Sheet	Drawing number 19033	Sheet/sheets 2/5
				Rev C

Change description	Date	Designed by
Design-cover removed, tap support plate added	29.10.2025	VS

HOB CUTOUT

PRINCIPLE MEASUREMENTS FOR HOB CUTOUT

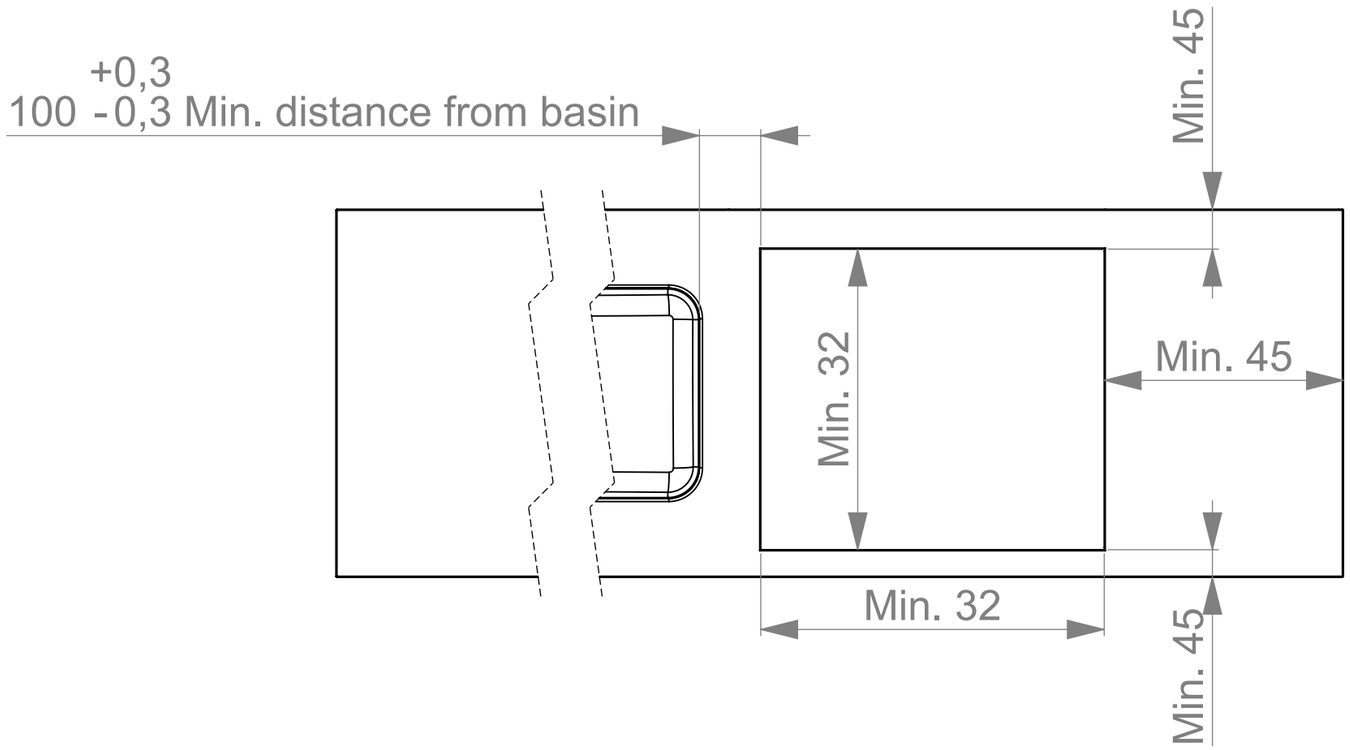

Mass kg		General tolerance	Designed by VS	Date 19.11.2019
Size A3	Scale 1:10	Item	Approved by JP	Date 03.01.2020
Member of ALVEUS		Description L SEVEN Technical Data Sheet	Drawing number 19033	Sheet/sheets 3/5
				Rev C

Change description	Date	Designed by
Design-cover removed, tap support plate added	29.10.2025	VS

SPACE REQUIREMENTS

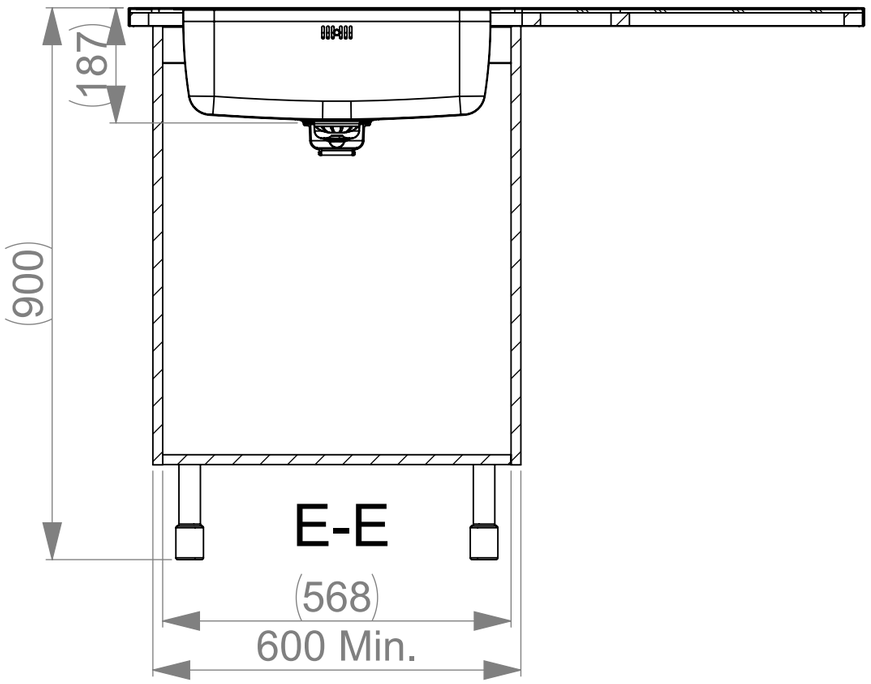

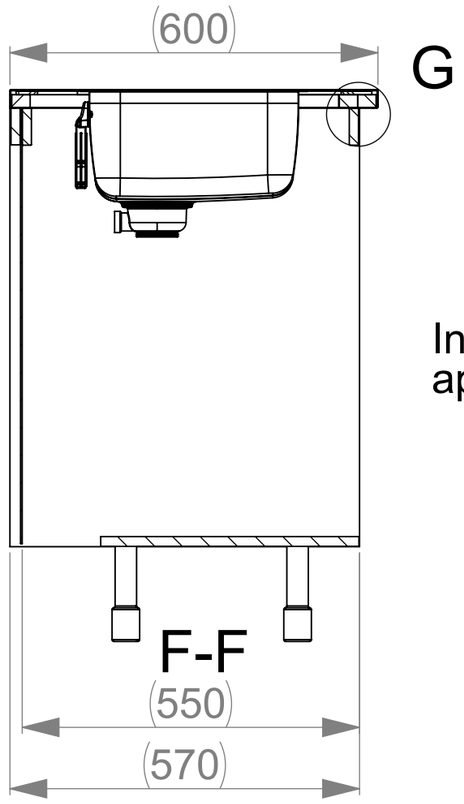

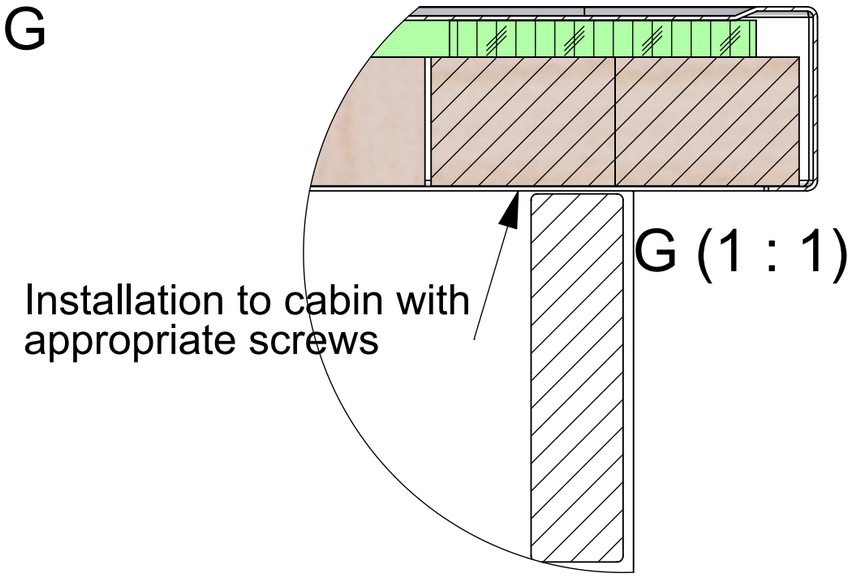

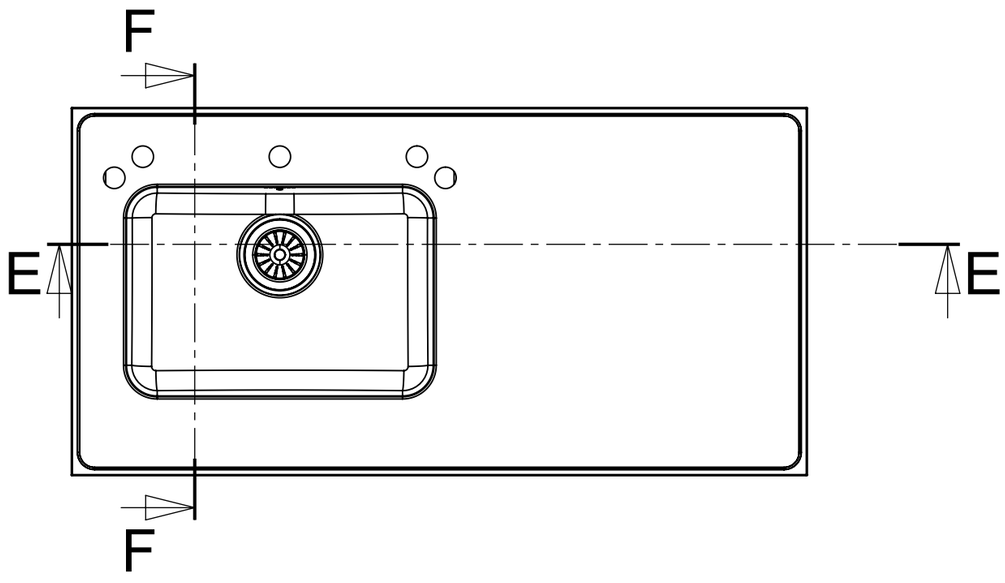

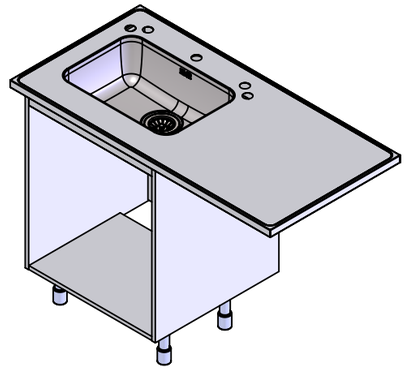

Mass kg		General tolerance	Designed by VS	Date 19.11.2019
Size A3	Scale 1:10	Item	Approved by JP	Date 03.01.2020
STALA Member of ALVEUS		Description L SEVEN Technical Data Sheet	Drawing number 19033	Sheet/sheets 4/5
				Rev C

Change description	Date	Designed by
Design-cover removed, tap support plate added	29.10.2025	VS

UNDER CONSTRUCTION

PRINCIPLE OF UNDER CONSTRUCTION: RIBBONS IN FRONT EDGE AND BACK EDGE

TWO RIBBONS IN FRONT EDGE

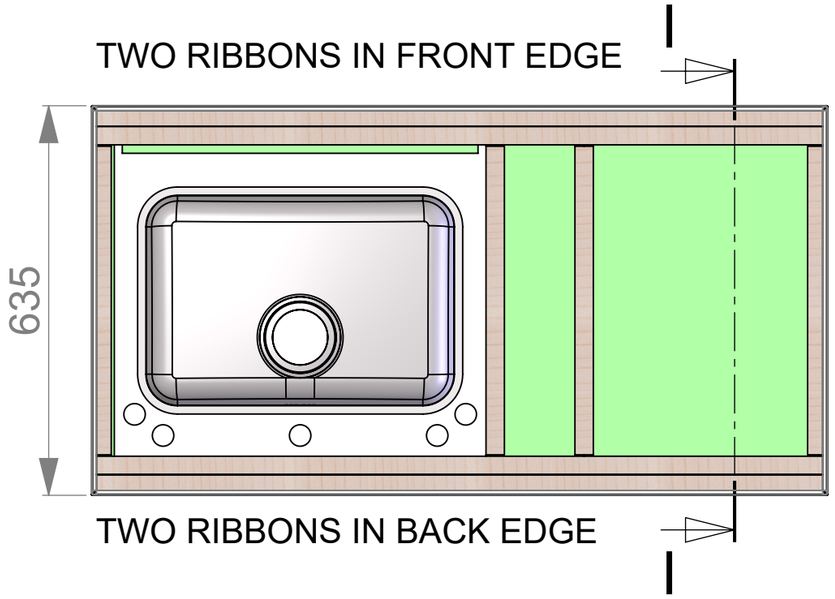

TWO RIBBONS IN BACK EDGE

TWO RIBBONS IN FRONT EDGE

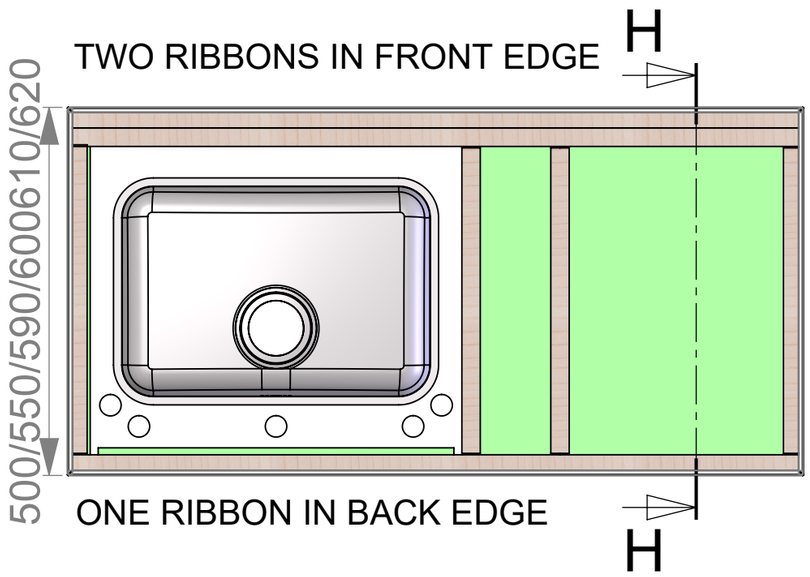

ONE RIBBON IN BACK EDGE

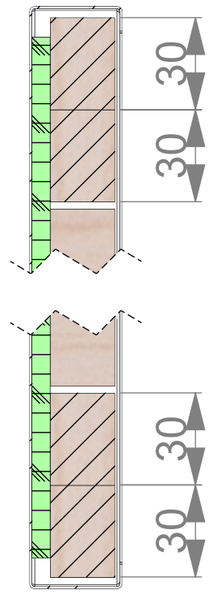

I-I (1 : 2)

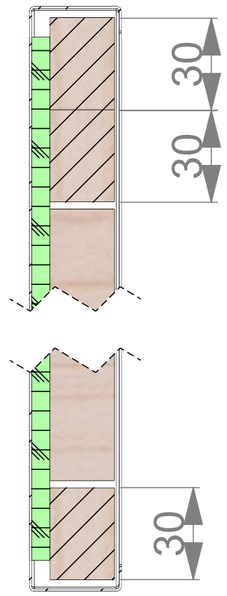

H-H (1 : 2)

Mass kg		General tolerance	Designed by VS	Date 19.11.2019
Size A3	Scale 1:10	Item	Approved by JP	Date 03.01.2020
STALA Member of ALVEUS		Description L SEVEN Technical Data Sheet	Drawing number 19033	Sheet/sheets 5/5
				Rev C